DOLCEFARNIENTE
OUTDOOR

ETERNAL COLLECTION

TECHNICAL BOOK
April 2024

— ABACO
Technical book
HEXAGON

HEXAGON

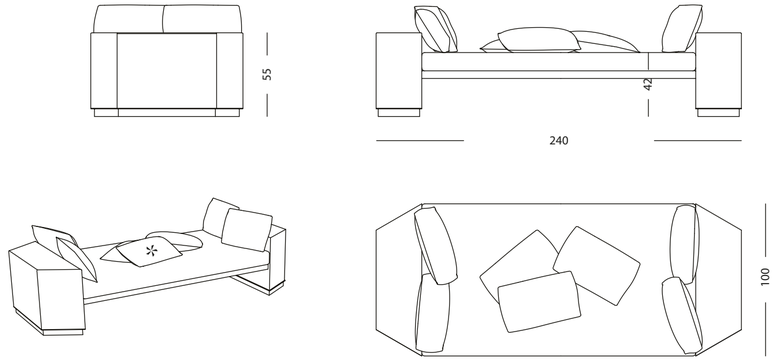

- 11802 Daybed
  240 x 100 x h' 42 h 55 cm

*number of decorative pillows suggested but not included in the item

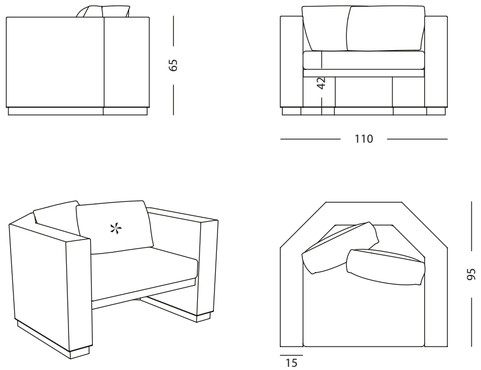

- 12210 Armchair
  110 x 95 x h' 42 h 65 cm

*number of decorative pillows suggested but not included in the item

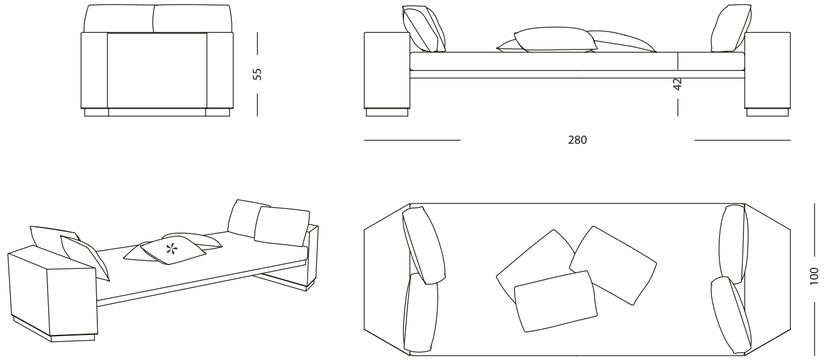

- 11803 Daybed
  280 x 100 x h' 42 h 55 cm

*number of decorative pillows suggested but not included in the item

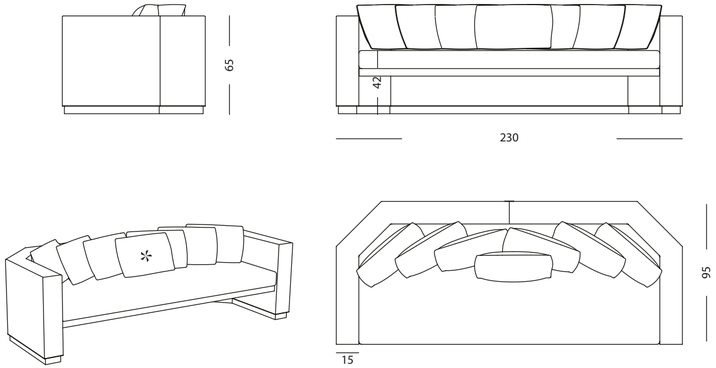

- 12410 Sofa
  230 x 95 x h' 42 h 65 cm

*number of decorative pillows suggested but not included in the item

HEXAGON

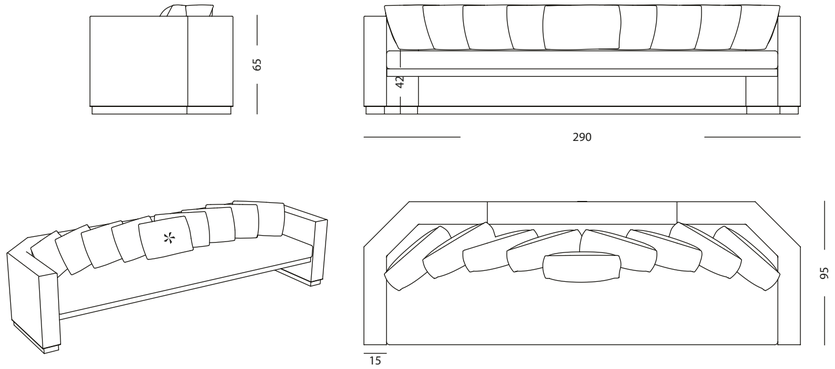

- 12412 Sofa
  290 x 95 x h' 42 h 65 cm

*number of decorative pillows suggested but not included in the item

HEXAGON

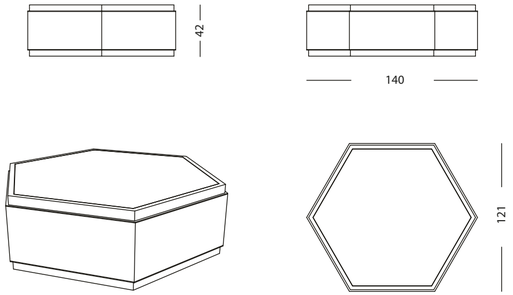

- 14246 Low table
140 x 121 x h 42

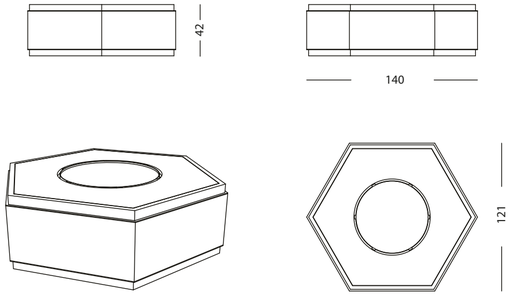

- 14247 Low table
with fire pit
140 x 121 x h 42

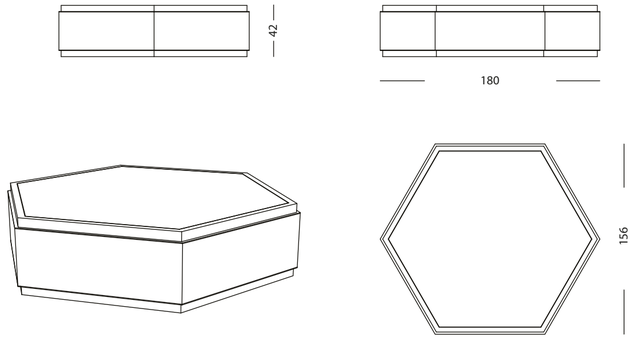

- 14248 Low table
180 x 156 x h 42

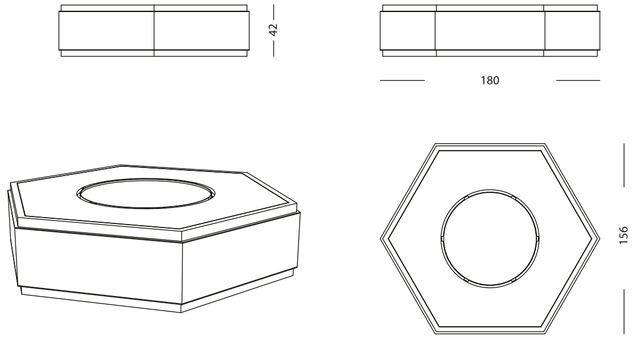

- 14249 Low table
with fire pit
180 x 156 x h 42

HEXAGON

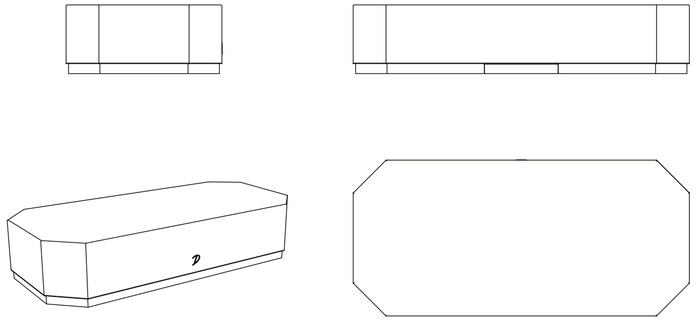

- 14264 Low table
  205 x 95 x h 42 cm

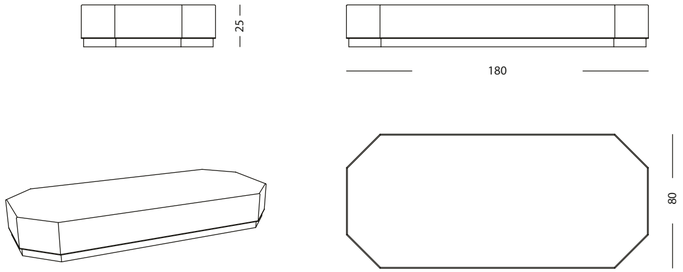

- 14242 Low table
  180 x 80 x h 25 cm

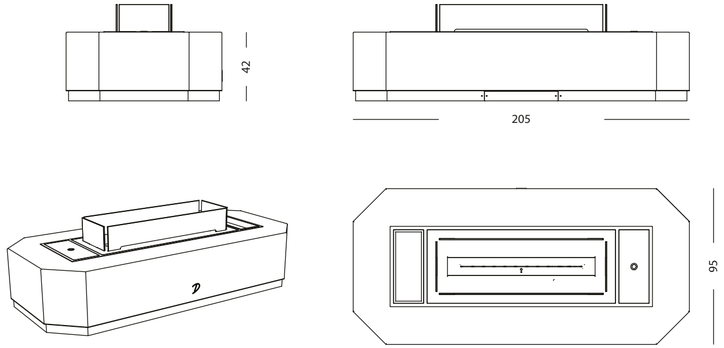

- 14266 Low table
  with fire pit
  205 x 95 x h 42 cm

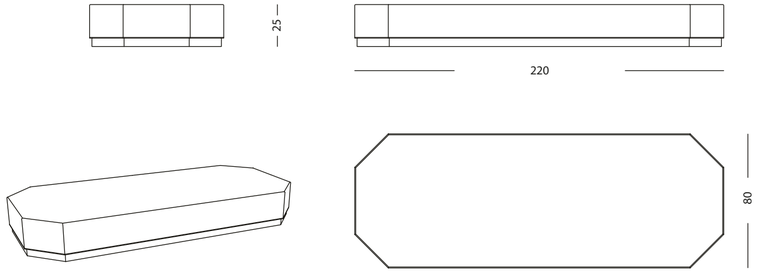

- 14244 Low table
  220 x 80 x h 25 cm

HEXAGON

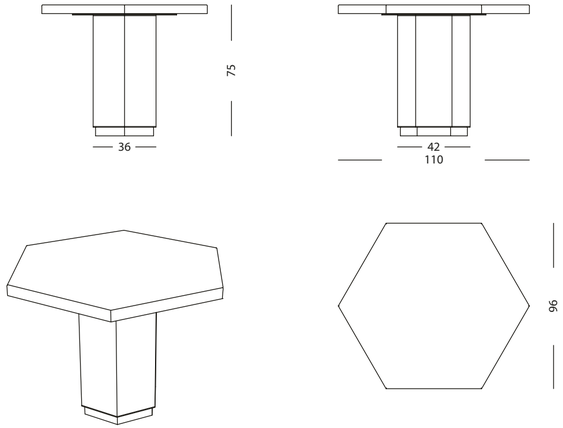

- 14834 Dining table
110 x 96 x h 75

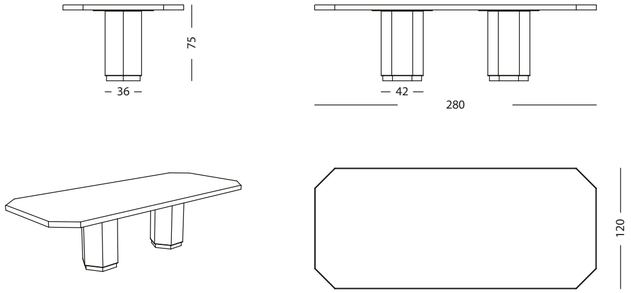

- 14830 Dining table
280 x 120 x h 75

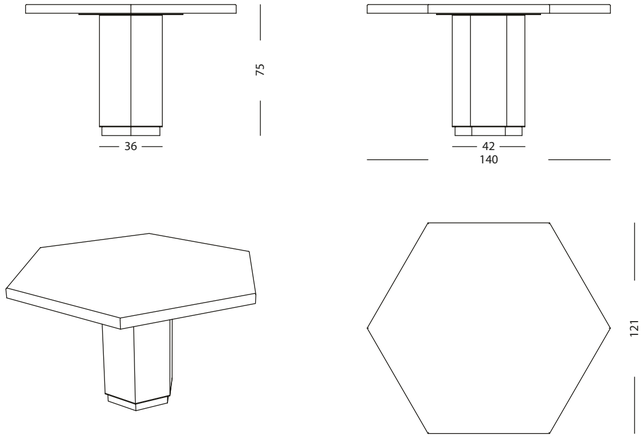

- 14836 Dining table
140 x 121 x h 75

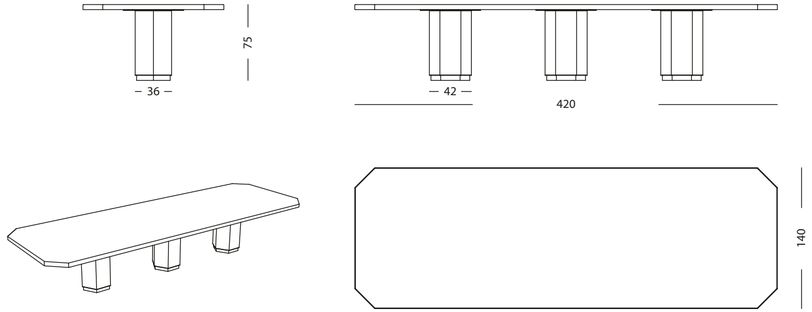

- 14832 Dining table
420 x 140 x h 75

HEXAGON

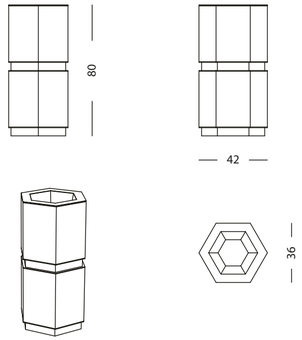

- 17402 Segmented vase holder
  42 x 36 x h 80

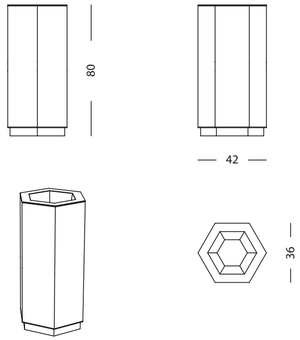

- 17403 Linear vase holder
  42 x 36 x h 80

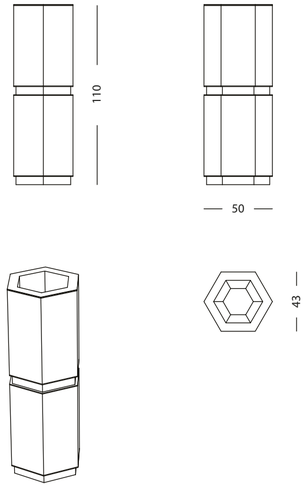

- 17404 Segmented vase holder
  50 x 43 x h 110

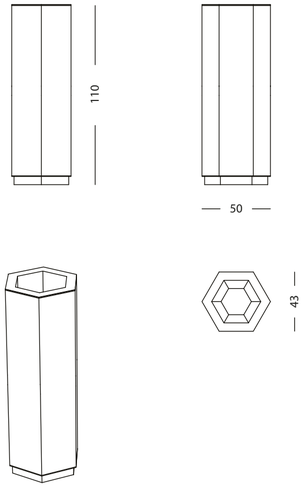

- 17405 Linear vase holder
  50 x 43 x h 110

HEXAGON

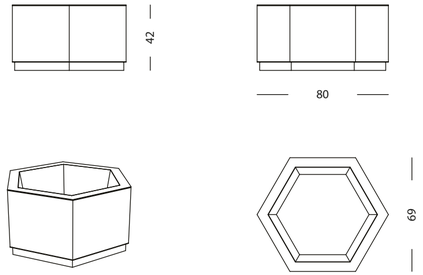

- 17410 Linear vase holder
  80 x 69 x h 42

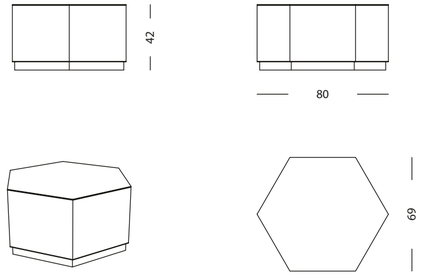

- 14272 Low table
  80 x 69 x h 42

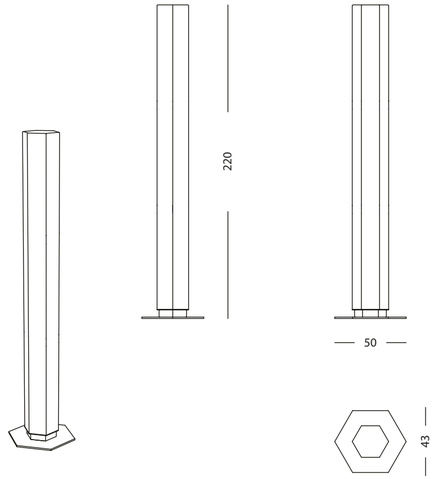

- 16803 Linear lamp
  50 x 43 x h 220

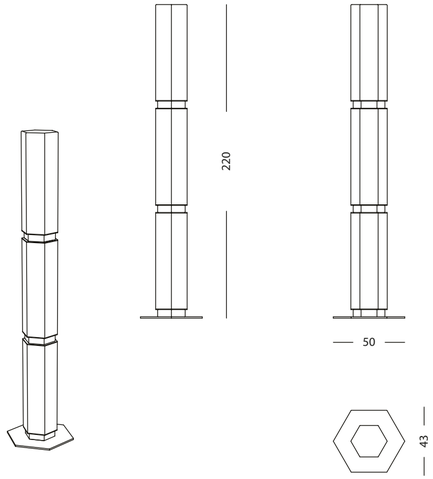

- 16802 Segmented lamp
  50 x 43 x h 220

— ABACO
Technical book
SQUARE

SQUARE

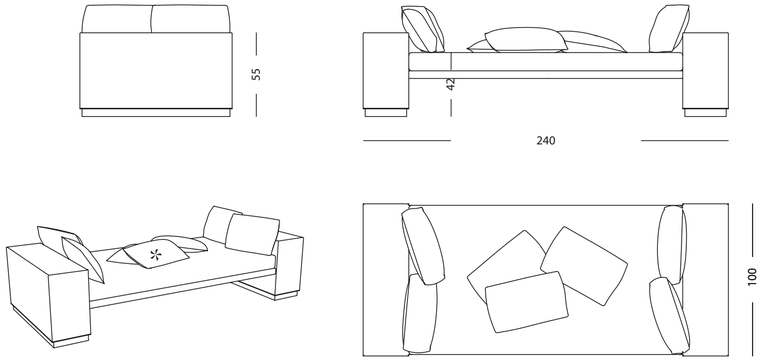

- 11804 Daybed
  240 x 100 x h' 42 h 55 cm

*number of decorative pillows suggested but not included in the item

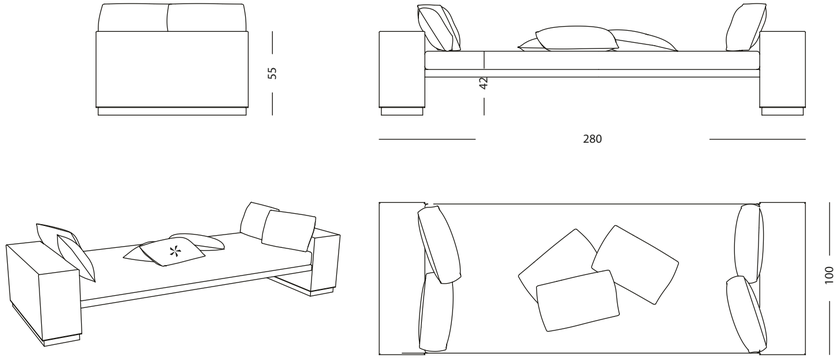

- 11805 Daybed
  280 x 100 x h' 42 h 55 cm

*number of decorative pillows suggested but not included in the item

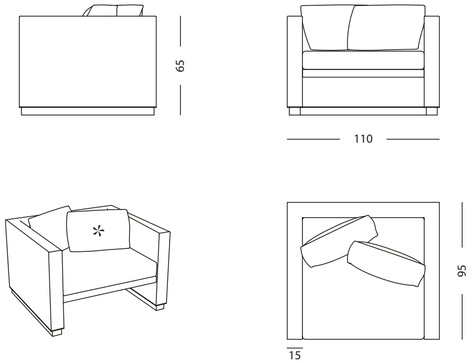

- 12216 Armchair
  110 x 95 x h' 42 h 65 cm

*number of decorative pillows suggested but not included in the item

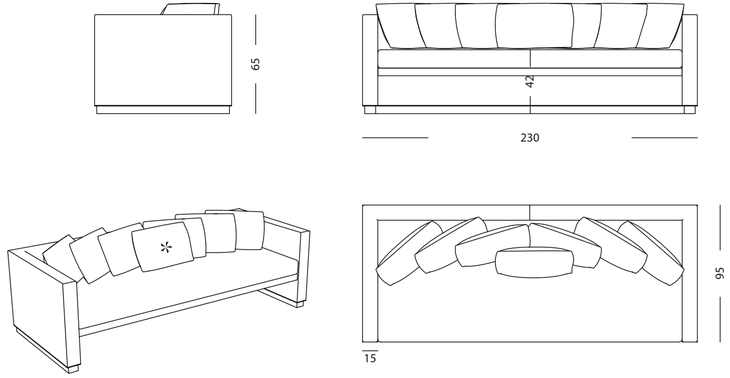

- 12416 Sofa
  230 x 95 x h' 42 h 65 cm

*number of decorative pillows suggested but not included in the item

SQUARE

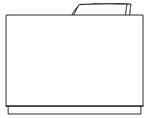

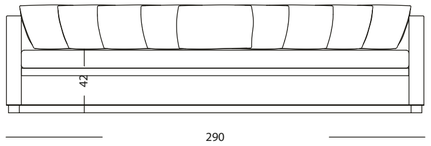

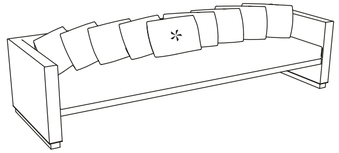

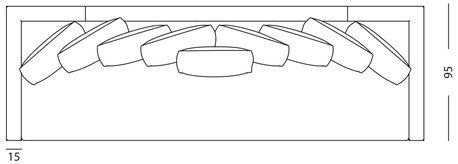

- 12418 Sofa
  290 x 95 x h' 42 h 65 cm

*number of decorative pillows suggested but not included in the item

SQUARE

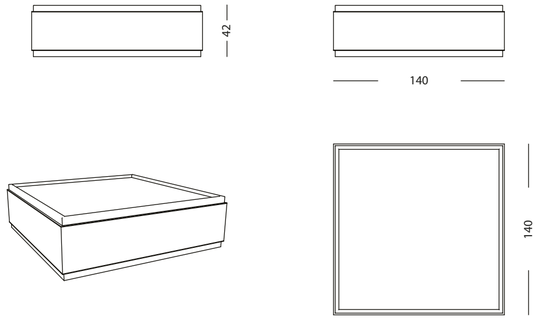

- 14258 Low table
  140 x 140 x h 42

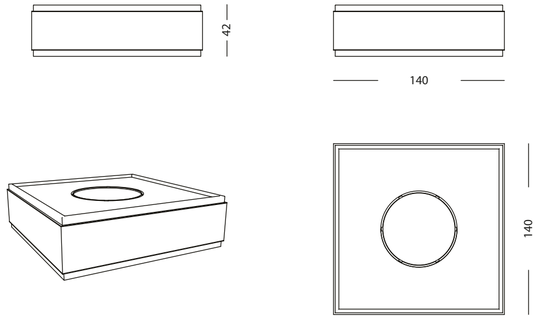

- 14259 Low table
  with fire pit
  140 x 140 x h 42

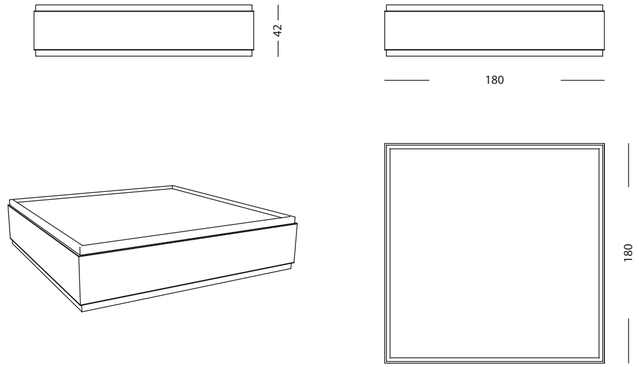

- 14260 Low table
  180 x 180 x h 42

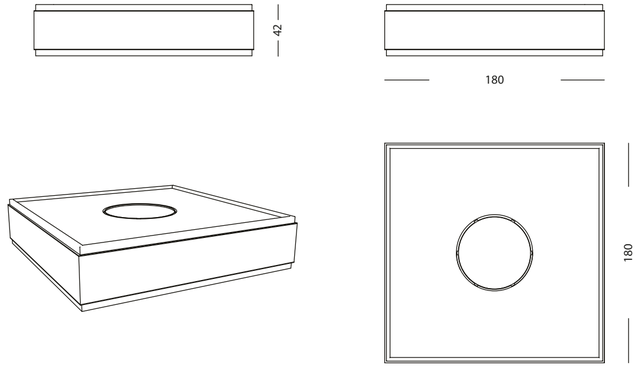

- 14261 Low table
  with fire pit
  180 x 180 x h 42

SQUARE

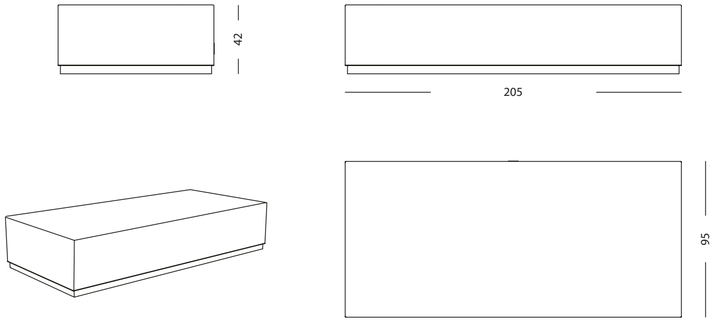

- xxxxx Low table
  205 x 95 x h 42 cm

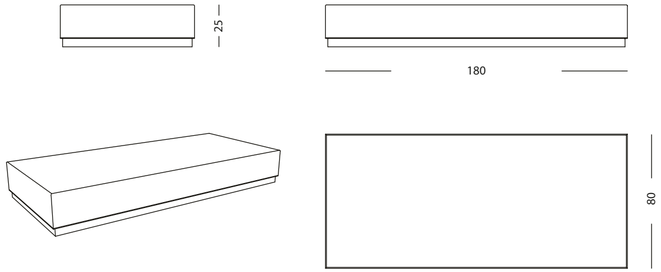

- 14254 Low table
  180 x 80 x h 25 cm

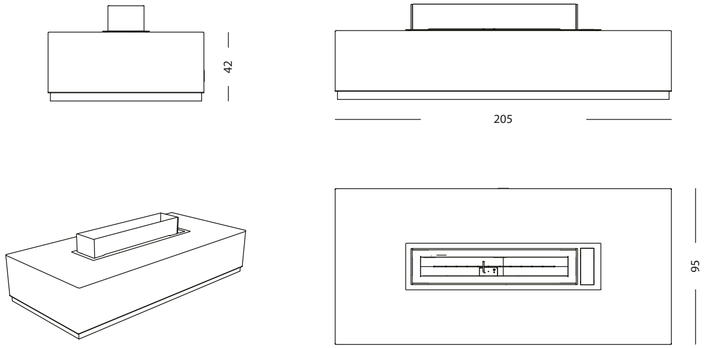

- 14262 Low table
  with fire pit
  205 x 95 x h 42 cm

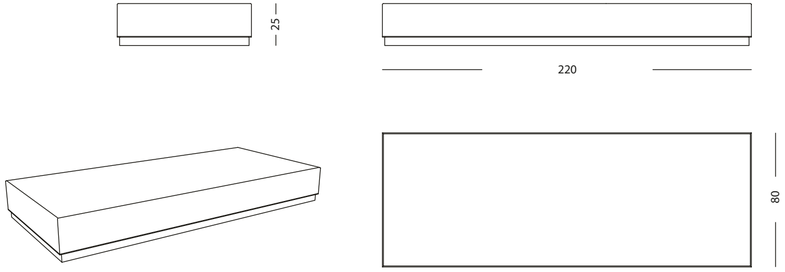

- 14256 Low table
  220 x 80 x h 25 cm

SQUARE

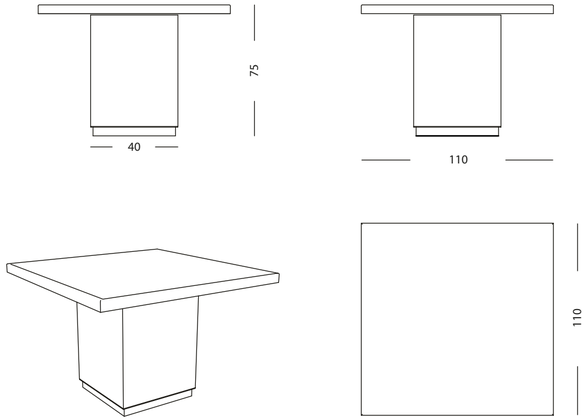

- 14838 Dining table
110 x 110 x h 75

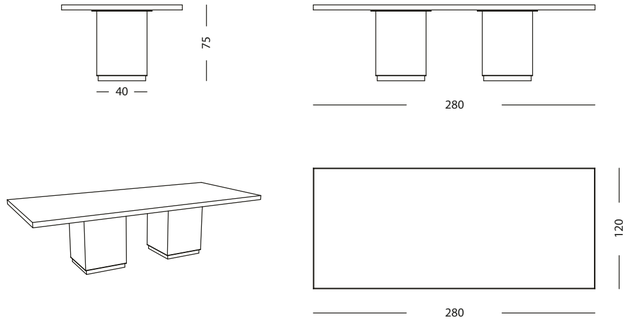

- 14842 Dining table
280 x 120 x h 75 cm

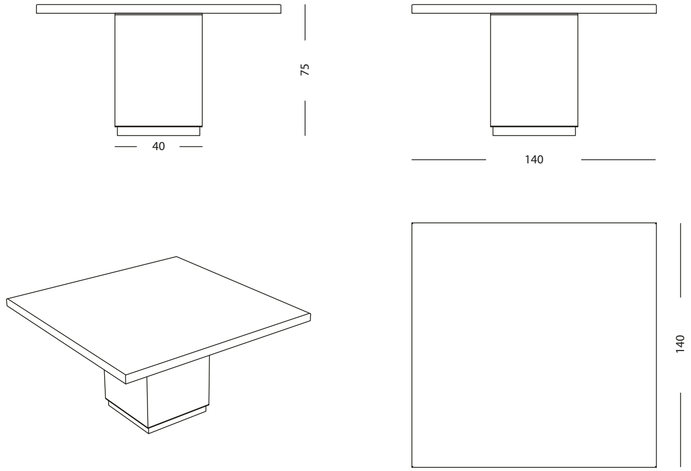

- 14840 Dining table
140 x 140 x h 75

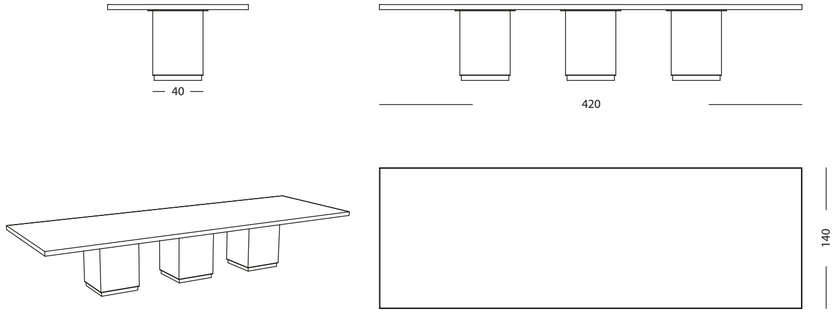

- 14844 Dining table
420 x 140 x h 75 cm

SQUARE

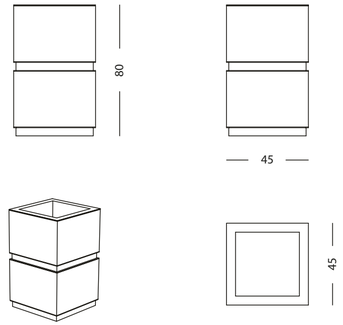

- 17406 Segmented vase holder
  45 x 45 x h 80 cm

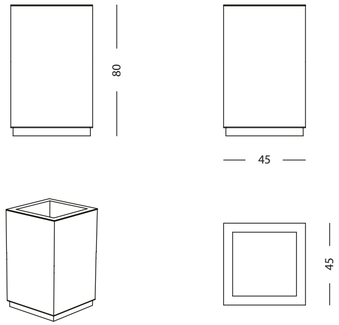

- 17407 Linear vase holder
  45 x 45 x h 80 cm

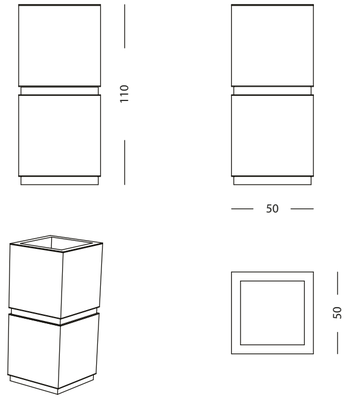

- 17408 Segmented vase holder
  50 x 50 x h 110 cm

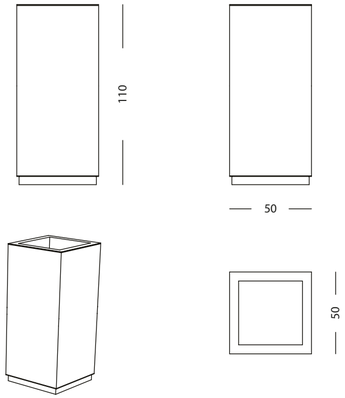

- 17409 Linear vase holder
  50 x 50 x h 110 cm

SQUARE

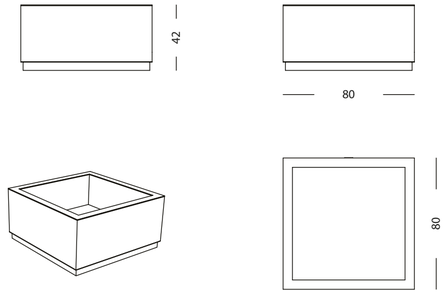

- 17412 Linear vase holder
  80 x 80 x h 42 cm

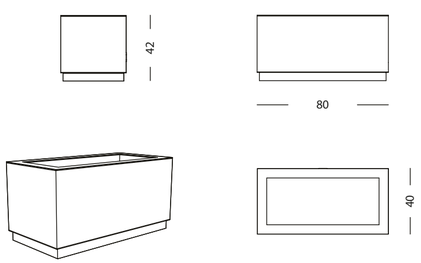

- 17414 Linear vase holder
  80 x 40 x h 42 cm

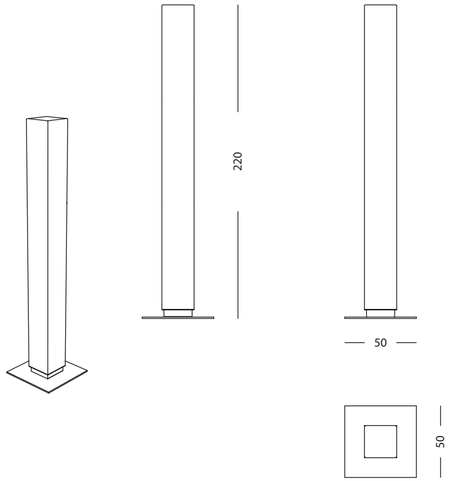

- 16805 Linear lamp
  50 x 50 x h 220 cm

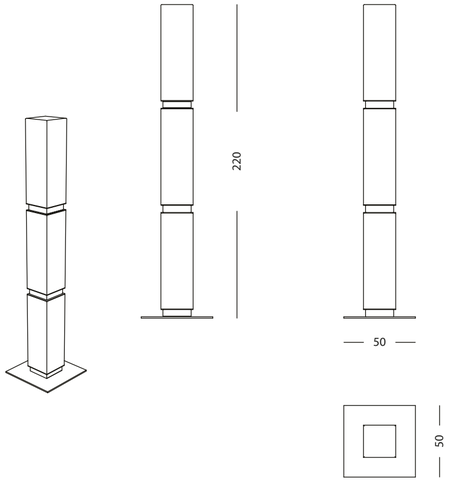

- 16804 Segmented lamp
  50 x 50 x h 220 cm

SQUARE

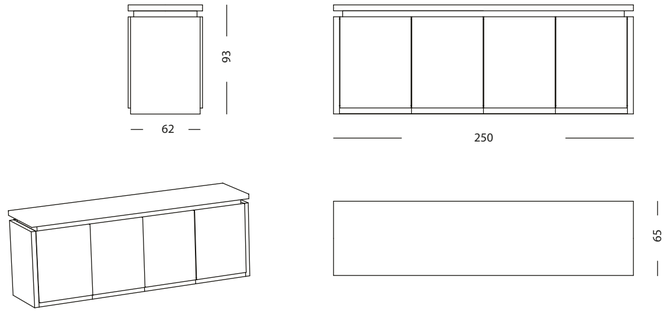

- 78073 Kitchen
  4 modules
  252 x 63 x h 93 cm

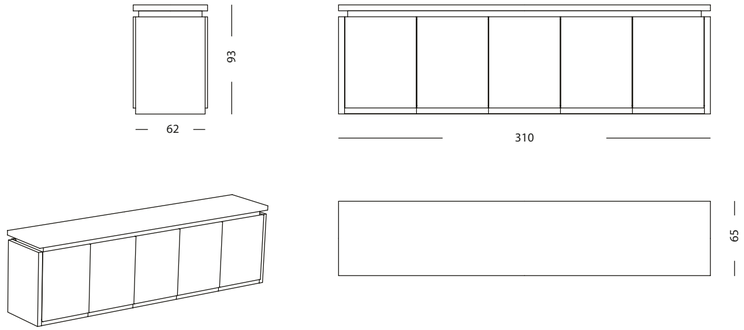

- 78071 Kitchen
  5 modules
  312 x 63 x h 93 cm

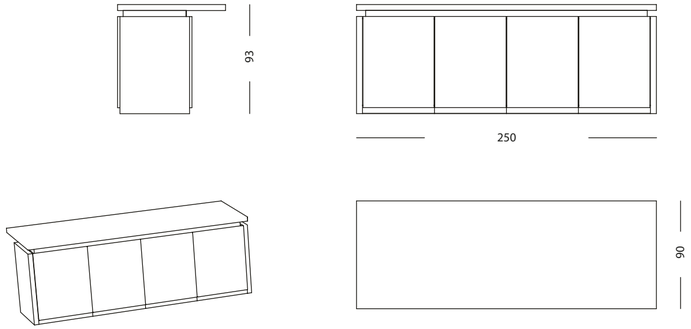

- 78072 Cantilever kitchen
  4 modules
  252 x 90 x h 93 cm

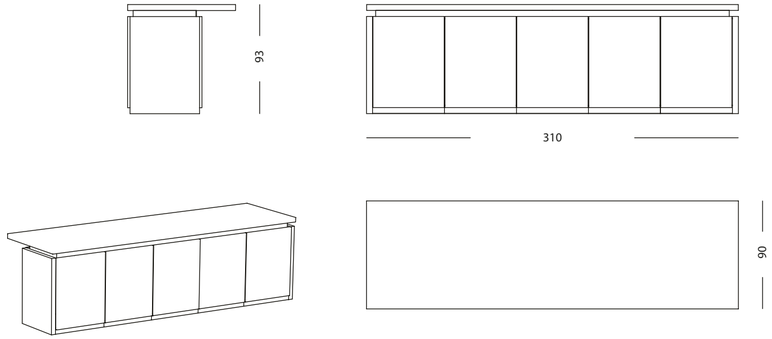

- 78070 Cantilever kitchen
  5 modules
  312 x 90 x h 93 cm

SQUARE

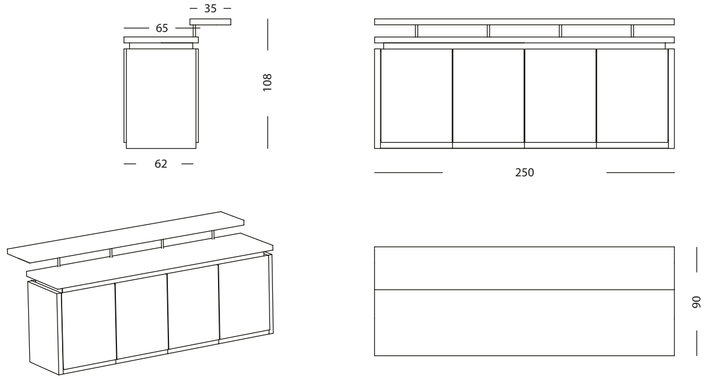

- 78077 Bar kitchen
  252 x 92 x h 108 cm

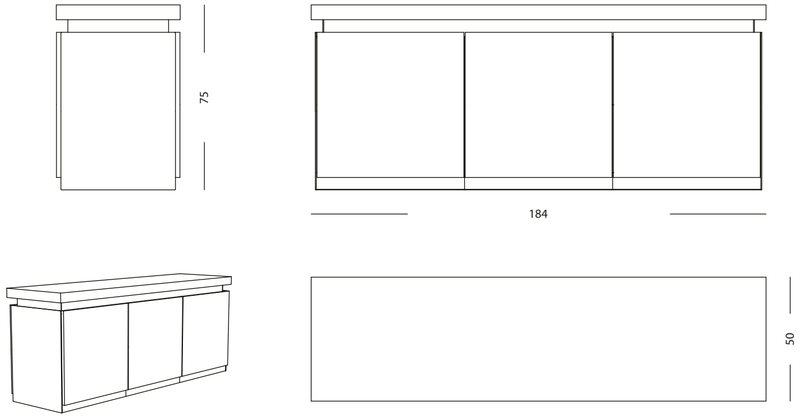

- 78074 Sideboard
  184 x 50 x h 75 cm

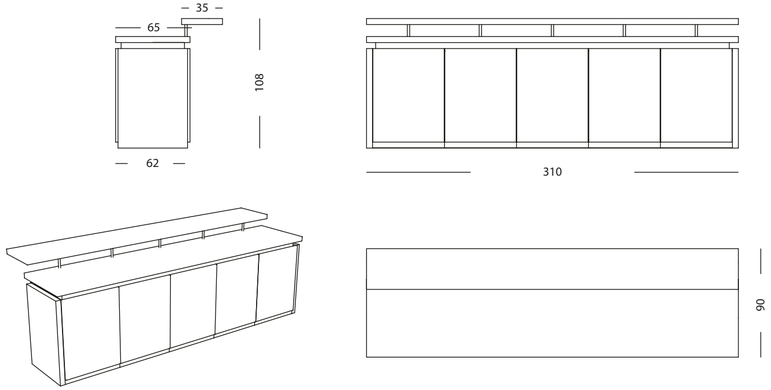

- 78076 Bar kitchen
  310 x 92 x h 108 cm

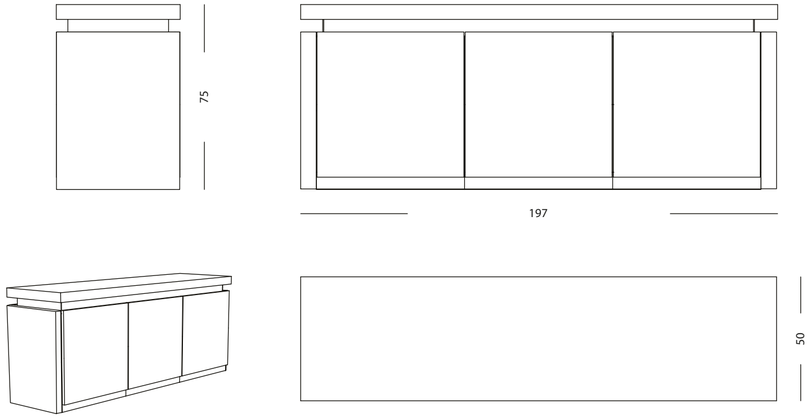

- 78075 Sideboard
  trevertine side panels
  197 x 50 x h 75 cm

SQUARE

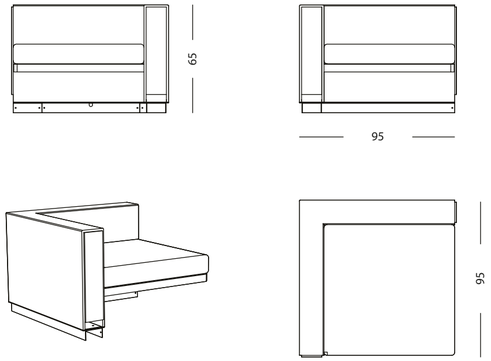

- 12222 corner element
  95 x 95 x h' 42 h 65 cm

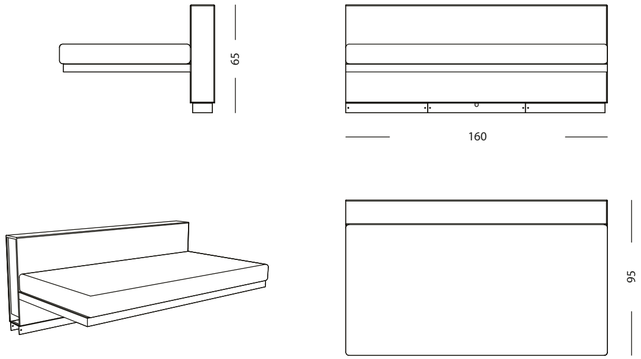

- 12227 2 seat
  left element
  160 x 95 x h' 42 h 65 cm

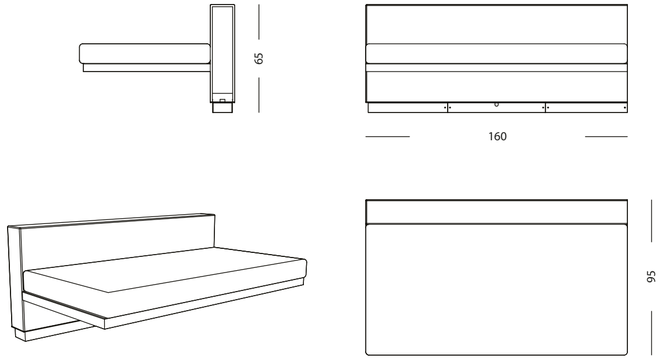

- 12226 2 seat
  right element
  160 x 95 x h' 42 h 65 cm

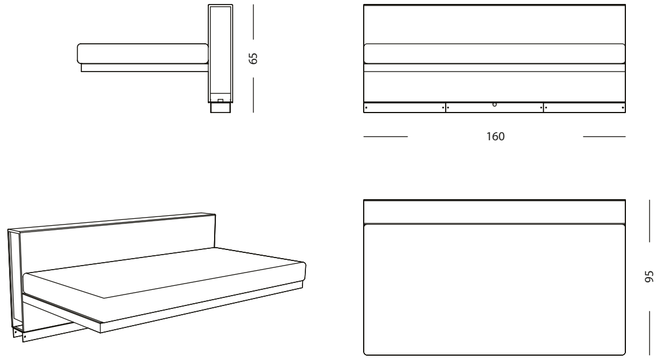

- 12224 2 seat
  central element
  160 x 95 x h' 42 h 65 cm

SQUARE

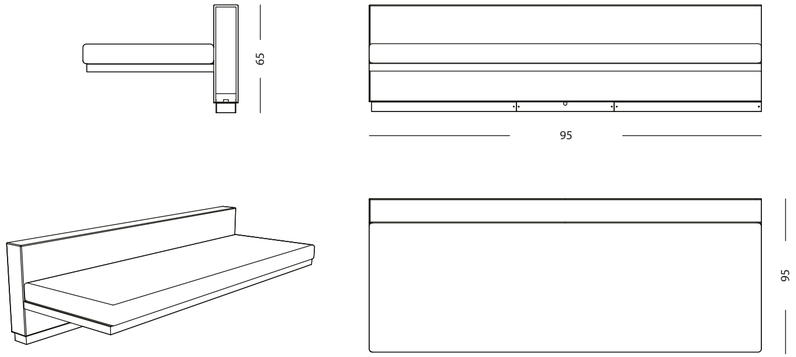

- 12228 3 seat
  right element
  240 x 95 x h' 42 h 65 cm

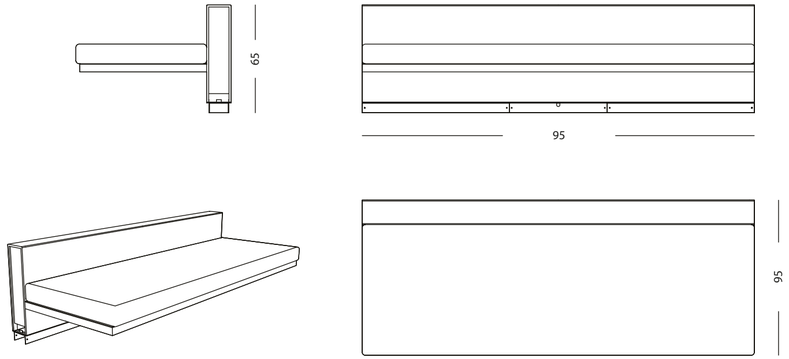

- 12225 3 seat
  central element
  240 x 95 x h' 42 h 65 cm

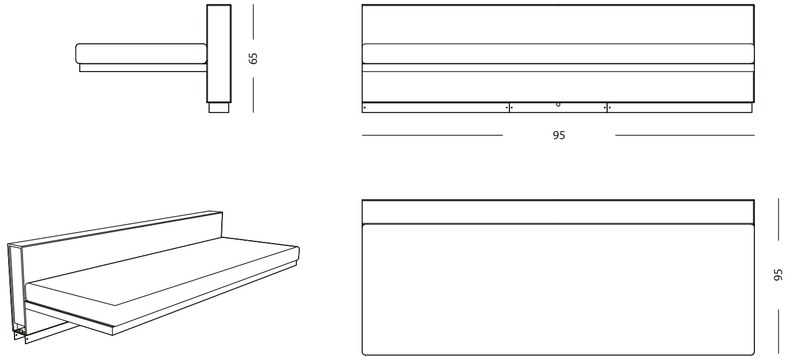

- 122289 3 seat
  left element
  240 x 95 x h' 42 h 65 cm

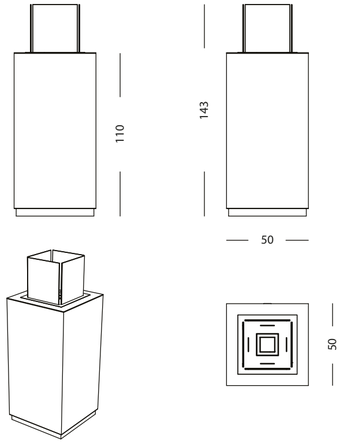

- 14402 Linear high fire pit
  50 x 50 x h 110/143 cm

SQUARE

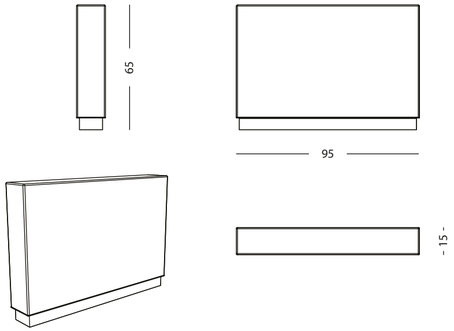

- 12231 high armrest
15 x 95 x h 65 cm

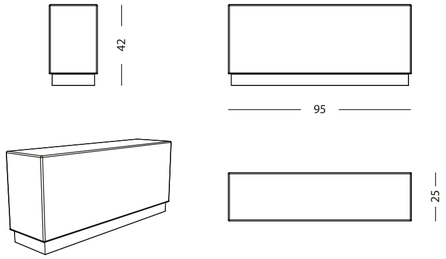

- 12230 low armrest
25 x 95 x h 42 cm

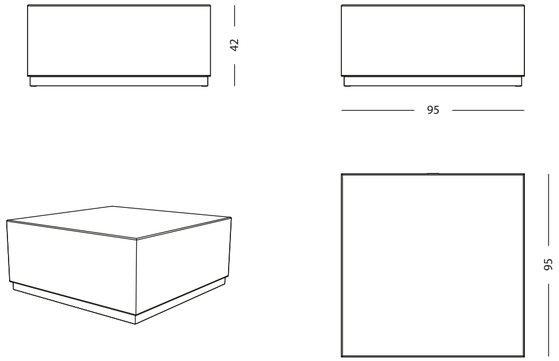

- 14269 Side table
95 x 95 x h 42 cm

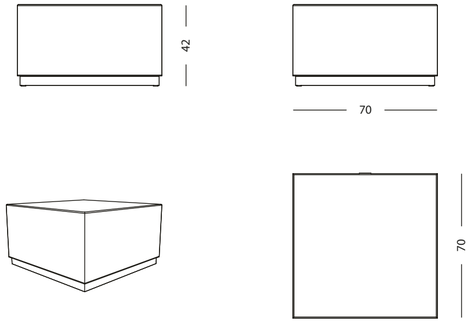

- 14268 Side table
70 x 70 x h 42 cm

DOLCEFARNIENTE
OUTDOOR

Is part of

DFN
OUTDOOR

DFN srl - Italy
via Luigi Einaudi 114 G - 61032 - Fano (PU)
T. 00 39 0721 1835821
e-mail: info@dfnsrl.com

www.dfnsrl.com